BK96 Pg 11955

COAST TO COAST SUBDIVISION

A PARCEL OF LAND BEING A PORTION OF GOVERNMENT LOTS 2, 3 AND 4 OF SECTION 21; A PORTION OF GOVERNMENT LOT 6; AND A PORTION OF THE SW1/4 OF THE SW1/4 OF SECTION 16, TOWNSHIP 4 NORTH, RANGE 1 EAST, BOISE MERIDIAN, CITY OF EAGLE, ADA COUNTY, IDAHO. 2006

MONUMENT CERTIFICATE

THIS IS TO CERTIFY THAT THIS PLAT IS BEING RECORDED UNDER THE PROVISIONS OF IDAHO CODE 50-1331 THROUGH 50-1333 AND THAT ALL INTERIOR MONUMENTS WILL BE SET WITHIN ONE YEAR FROM THE RECORDING DATE OF THIS PLAT.

EASEMENT NOTE

THERE SHALL BE A 12-FOOT WIDE PUBLIC UTILITIES EASEMENT WITHIN LOT LINES ABUTTING ALL PUBLIC STREETS & HIGHWAYS AND CENTERED ON LOT LINES WITH THE EXCEPTION OF: LOT 1 BLOCKS 3, 4, 5, 6 & 7.

PLAT NOTES

SEE SHEET 8 OF 9

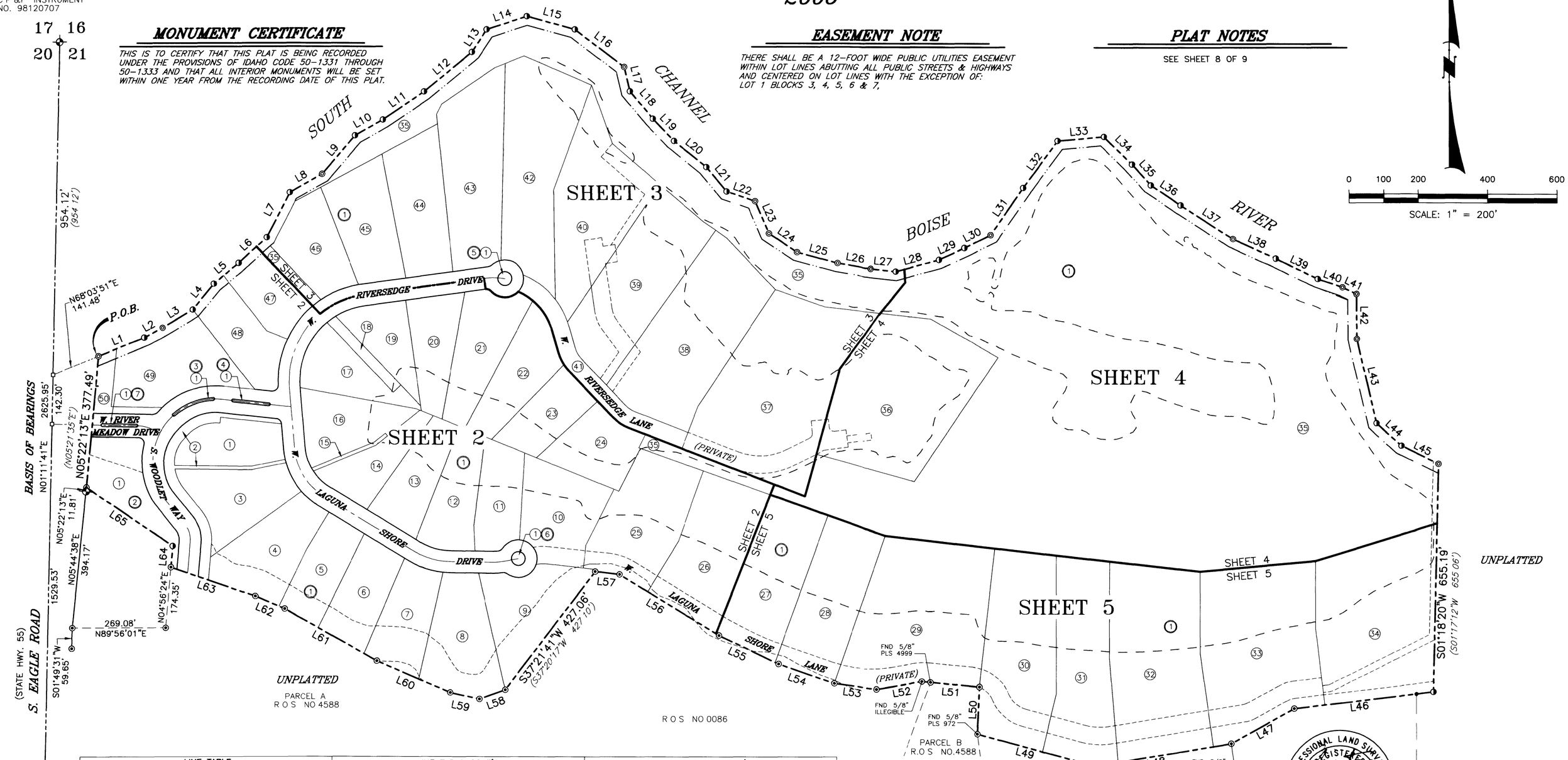

LINE TABLE					LINE TABLE CONT'D					LINE TABLE CONT'D				
LINE	BEARING	LENGTH	RECORD	RECORD	LINE	BEARING	LENGTH	RECORD	RECORD	LINE	BEARING	LENGTH	RECORD	RECORD
L1	N68°03'51"E	141.90'	(N68°04'08"E)	(141.93')	L23	S23°20'08"E	100.81'	NONE		L45	S64°27'24"E	119.96'	(S64°28'44"E)	(119.58')
L2	N62°29'01"E	59.77'	(N62°35'07"E)	(59.57')	L24	S56°23'45"E	97.09'	NONE		L46	S83°11'19"W	405.08'	(S83°11'10"W)	(405.08')
L3	N58°49'39"E	101.41'	(N58°45'02"E)	(101.58')	L25	S74°59'31"E	120.47'	NONE		L47	S61°06'14"W	207.90'	(S61°08'00"W)	(207.96')
L4	N39°02'56"E	95.80'	(N38°57'09"E)	(95.82')	L26	S80°50'51"E	96.57'	(S81°09'07"E)	(95.30')	L48	S80°46'55"W	395.37'	(S80°50'11"W)	(395.46')
L5	N50°12'34"E	93.52'	(N50°14'01"E)	(93.54')	L27	S84°01'21"E	72.41'	(S83°36'36"E)	(73.80')	L49	N75°02'05"W	352.21'	(N75°06'55"W)	(352.02')
L6	N48°19'28"E	108.52'	(N48°19'30"E)	(108.56')	L28	N74°49'51"E	128.65'	(N74°48'46"E)	(128.77')	L50	N02°31'37"E	136.79'	(N02°34'22"E)	(136.76')
L7	N27°15'15"E	144.52'	(N27°18'02"E)	(144.45')	L29	N65°40'05"E	80.21'	(N65°42'39"E)	(80.09')	L51	N84°39'52"W	166.29'	(N84°40'47"W)	(166.41')
L8	N60°31'27"E	108.31'	NONE		L30	N63°46'24"E	84.23'	(N63°42'00"E)	(84.08')	L52	S80°11'57"W	132.62'	(S80°12'03"W)	(132.57')
L9	N40°35'06"E	145.83'	NONE		L31	N34°44'35"E	164.90'	(N34°50'58"E)	(164.96')	L53	N82°27'21"W	122.14'	(N82°27'06"W)	(122.18')
L10	N60°22'42"E	91.62'	(N60°17'49"E)	(91.48')	L32	N36°10'26"E	168.53'	(N36°09'56"E)	(168.41')	L54	N70°55'49"W	169.74'	(N70°58'11"W)	(169.70')
L11	N55°43'13"E	143.71'	(N55°45'23"E)	(143.73')	L33	N84°57'08"E	133.69'	(N84°58'02"E)	(133.66')	L55	N64°33'12"W	189.55'	(N64°34'35"W)	(189.65')
L12	N50°21'55"E	178.69'	(N50°20'34"E)	(178.66')	L34	S45°23'11"E	113.33'	(S45°30'53"E)	(113.25')	L56	N58°35'08"W	335.96'	(N58°33'39"W)	(336.00')
L13	N33°25'52"E	77.65'	(N33°27'53"E)	(77.62')	L35	S41°57'20"E	81.63'	(S41°57'57"E)	(81.55')	L57	N83°16'51"W	70.71'	(N83°21'33"W)	(70.76')
L14	N71°50'37"E	122.00'	(N71°48'21"E)	(122.07')	L36	S56°06'10"E	102.87'	(S56°03'08"E)	(102.95')	L58	S70°15'47"W	79.45'	(S70°13'27"W)	(79.52')
L15	S74°46'37"E	142.78'	(S74°48'23"E)	(142.84')	L37	S57°05'38"E	178.83'	NONE		L59	N77°31'41"W	85.93'	(N77°24'34"W)	(85.90')
L16	S52°47'44"E	178.18'	(S52°45'38"E)	(178.16')	L38	S65°56'22"E	135.90'	NONE		L60	N66°43'35"W	229.53'	(N66°44'35"W)	(229.62')
L17	S13°20'20"E	72.01'	(S13°21'15"E)	(71.99')	L39	S64°13'24"E	134.29'	NONE		L61	N60°39'03"W	305.31'	(N60°30'36"W)	(305.27')
L18	S39°53'42"E	102.52'	(S39°53'02"E)	(102.63')	L40	S71°06'36"E	74.79'	(S71°06'31"E)	(74.42')	L62	N66°55'28"W	91.88'	(N66°52'17"W)	(91.84')
L19	S43°51'39"E	88.11'	(S43°57'24"E)	(88.33')	L41	S64°26'40"E	44.55'	NONE		L63	N70°58'15"W	256.39'	(N70°59'34"W)	(256.40')
L20	S51°11'01"E	119.53'	(S51°11'04"E)	(119.23')	L42	S00°26'41"E	129.79'	NONE		L64	N04°54'24"E	60.95'	(N04°54'52"E)	(60.98')
L21	S40°02'22"E	90.92'	(S40°01'07"E)	(90.96')	L43	S13°08'14"E	248.47'	NONE		L65	N55°46'25"W	300.86'	(N55°45'49"W)	(300.81')
L22	S71°11'18"E	86.49'	(S70°46'04"E)	(86.03')	L44	S48°03'47"E	96.42'	(S48°02'01"E)	(96.42')					

LEGEND

- SUBDIVISION BOUNDARY
- RIGHT OF WAY LINE
- CENTERLINE
- LOT LINE
- EASEMENT LINE
- SECTION LINE
- SURVEY TIE LINE
- APPROX. EDGE POND
- SHEET MATCH LINE
- ADJOINING PROPERTY LINE
- (954 12') RECORD DATA
- FOUND BRASS CAP
- FOUND BRASS CAP R/W MARKER
- FOUND 1/2" REBAR
- FOUND 1/2" REBAR, SET 5/8" STEEL REBAR W/PLASTIC CAP PLS 8961
- SET 5/8" STEEL REBAR W/PLASTIC CAP PLS 8961
- FOUND 5/8" REBAR
- CALCULATED POINT (NOTHING SET)
- (26) LOT NUMBER
- (1) BLOCK NUMBER

PROFESSIONAL LAND SURVEYOR REGISTERED 8961 9-28-06 STATE OF IDAHO STEVEN J. FRISBIE

RESTRICTIVE COVENANTS

INSTRUMENT NUMBER 106594238

BUILDING AND OCCUPANCY IN THIS SUBDIVISION SHALL CONFORM TO THE STANDARDS ESTABLISHED BY THE RESTRICTIVE COVENANTS AS FILED IN BOOK _____, AT PAGE _____, MISCELLANEOUS RECORDS, ADA COUNTY, IDAHO.

TOOTHMAN-ORTON ENGINEERING COMPANY

9777 CHINDEN BOULEVARD
BOISE, IDAHO 83714
(208) 323-2288

H:\03020\ACADDWG\SURVEY\FINAL PLAT SHT1.dwg

BK 96 Pg 11956

COAST TO COAST SUBDIVISION

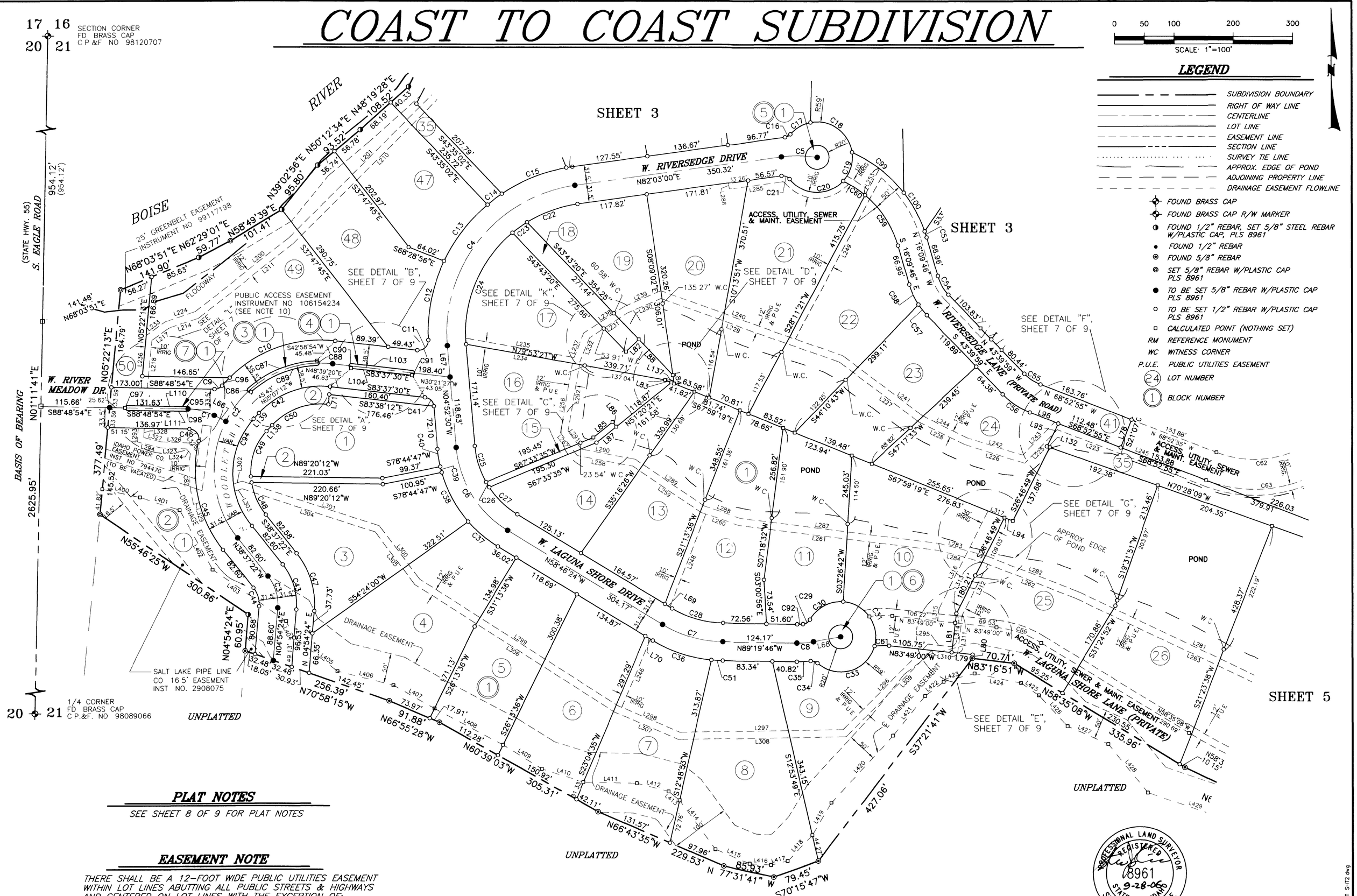

PLAT NOTES

SEE SHEET 8 OF 9 FOR PLAT NOTES

EASEMENT NOTE

THERE SHALL BE A 12-FOOT WIDE PUBLIC UTILITIES EASEMENT WITHIN LOT LINES ABUTTING ALL PUBLIC STREETS & HIGHWAYS AND CENTERED ON LOT LINES WITH THE EXCEPTION OF: LOT 1 BLOCKS 3, 4, 5, 6 & 7,

MONUMENT CERTIFICATE

THIS IS TO CERTIFY THAT THIS PLAT IS BEING RECORDED UNDER THE PROVISIONS OF IDAHO CODE 50-1331 THROUGH 50-1333 AND THAT ALL INTERIOR MONUMENTS WILL BE SET WITHIN ONE YEAR FROM THE RECORDING DATE OF THIS PLAT.

CURVE AND LINE TABLES

SEE SHEET 6 OF 9 FOR CURVE AND LINE TABLES

TOOTHMAN-ORTON ENGINEERING COMPANY

9777 CHINDEN BOULEVARD
BOISE, IDAHO 83714
(208) 323-2288

H:\03020\ACADDWG\SURVEY\FINAL PLAT SHT2.dwg

BK 96 Pg 11957

COAST TO COAST SUBDIVISION

CURVE AND LINE TABLES

SEE SHEET 6 OF 9 FOR CURVE AND LINE TABLES

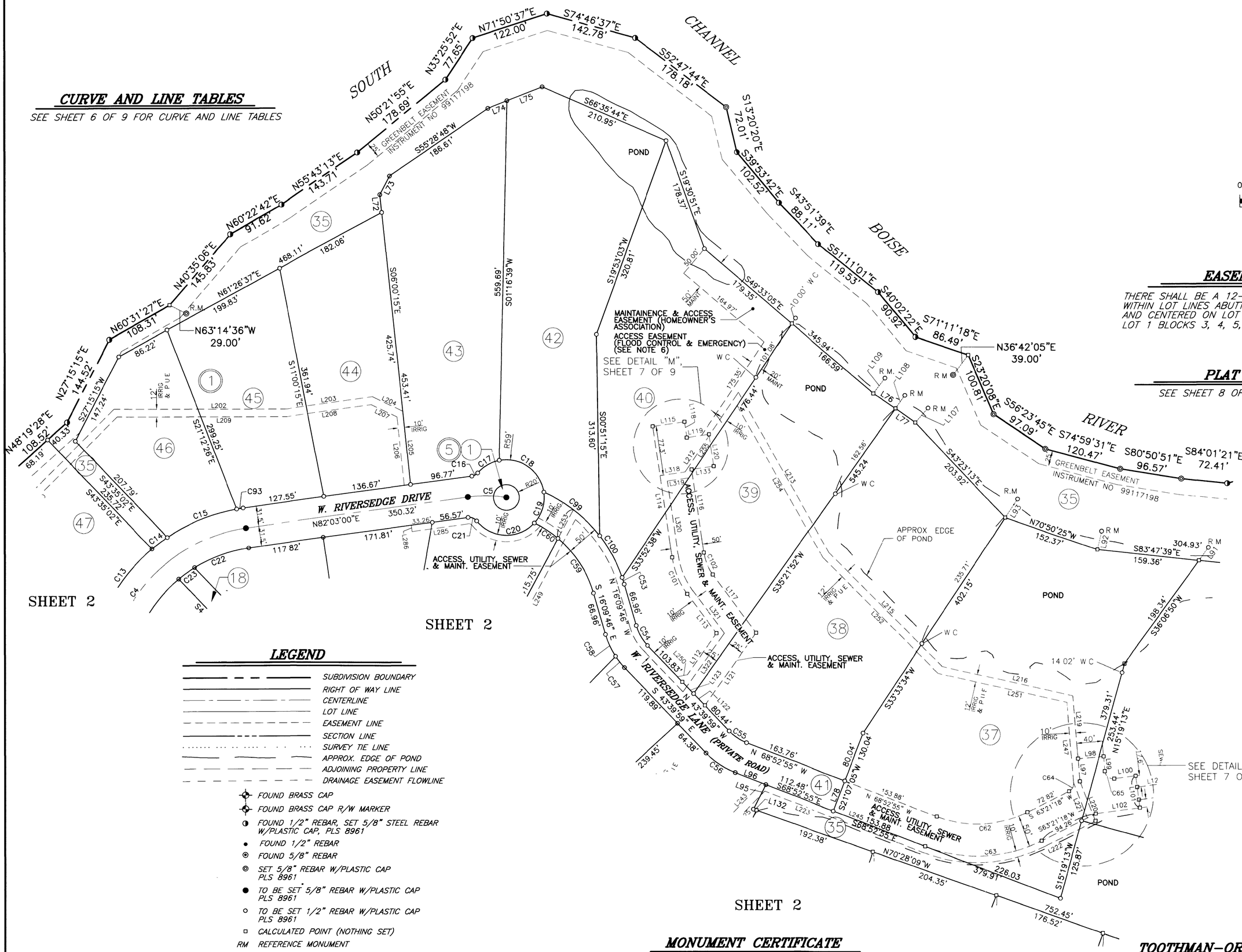

0 50 100 200 300

SCALE: 1"=100'

EASEMENT NOTE

THERE SHALL BE A 12-FOOT WIDE PUBLIC UTILITIES EASEMENT WITHIN LOT LINES ABUTTING ALL PUBLIC STREETS & HIGHWAYS AND CENTERED ON LOT LINES WITH THE EXCEPTION OF: LOT 1 BLOCKS 3, 4, 5, 6 & 7,

PLAT NOTES

SEE SHEET 8 OF 9 FOR PLAT NOTES

LEGEND

- SUBDIVISION BOUNDARY
- RIGHT OF WAY LINE
- CENTERLINE
- LOT LINE
- EASEMENT LINE
- SECTION LINE
- SURVEY TIE LINE
- APPROX. EDGE OF POND
- ADJOINING PROPERTY LINE
- DRAINAGE EASEMENT FLOWLINE
- FOUND BRASS CAP
- FOUND BRASS CAP R/W MARKER
- FOUND 1/2" REBAR, SET 5/8" STEEL REBAR W/PLASTIC CAP, PLS 8961
- FOUND 1/2" REBAR
- FOUND 5/8" REBAR
- SET 5/8" REBAR W/PLASTIC CAP PLS 8961
- TO BE SET 5/8" REBAR W/PLASTIC CAP PLS 8961
- TO BE SET 1/2" REBAR W/PLASTIC CAP PLS 8961
- CALCULATED POINT (NOTHING SET)
- RM REFERENCE MONUMENT
- WC WITNESS CORNER
- P.U.E. PUBLIC UTILITIES EASEMENT
- (24) LOT NUMBER
- (1) BLOCK NUMBER

MONUMENT CERTIFICATE

THIS IS TO CERTIFY THAT THIS PLAT IS BEING RECORDED UNDER THE PROVISIONS OF IDAHO CODE 50-1331 THROUGH 50-1333 AND THAT ALL INTERIOR MONUMENTS WILL BE SET WITHIN ONE YEAR FROM THE RECORDING DATE OF THIS PLAT.

PROFESSIONAL LAND SURVEYOR REGISTERED 8961 9-28-06 STATE OF IDAHO STEVEN J. FRISBIE

TOOTHMAN-ORTON ENGINEERING COMPANY

9777 CHINDEN BOULEVARD
BOISE, IDAHO 83714
(208) 323-2288

H:\03020\ACADDWG\SURVEY\FINAL PLAT SH17.dwg

BK 96 Pg 11958

COAST TO COAST SUBDIVISION

EASEMENT NOTE

THERE SHALL BE A 12-FOOT WIDE PUBLIC UTILITIES EASEMENT WITHIN LOT LINES ABUTTING ALL PUBLIC STREETS & HIGHWAYS AND CENTERED ON LOT LINES WITH THE EXCEPTION OF: LOT 1 BLOCKS 3, 4, 5, 6 & 7,

PLAT NOTES

SEE SHEET 8 OF 9 FOR PLAT NOTES

CURVE AND LINE TABLES

SEE SHEET 6 OF 9 FOR CURVE AND LINE TABLES

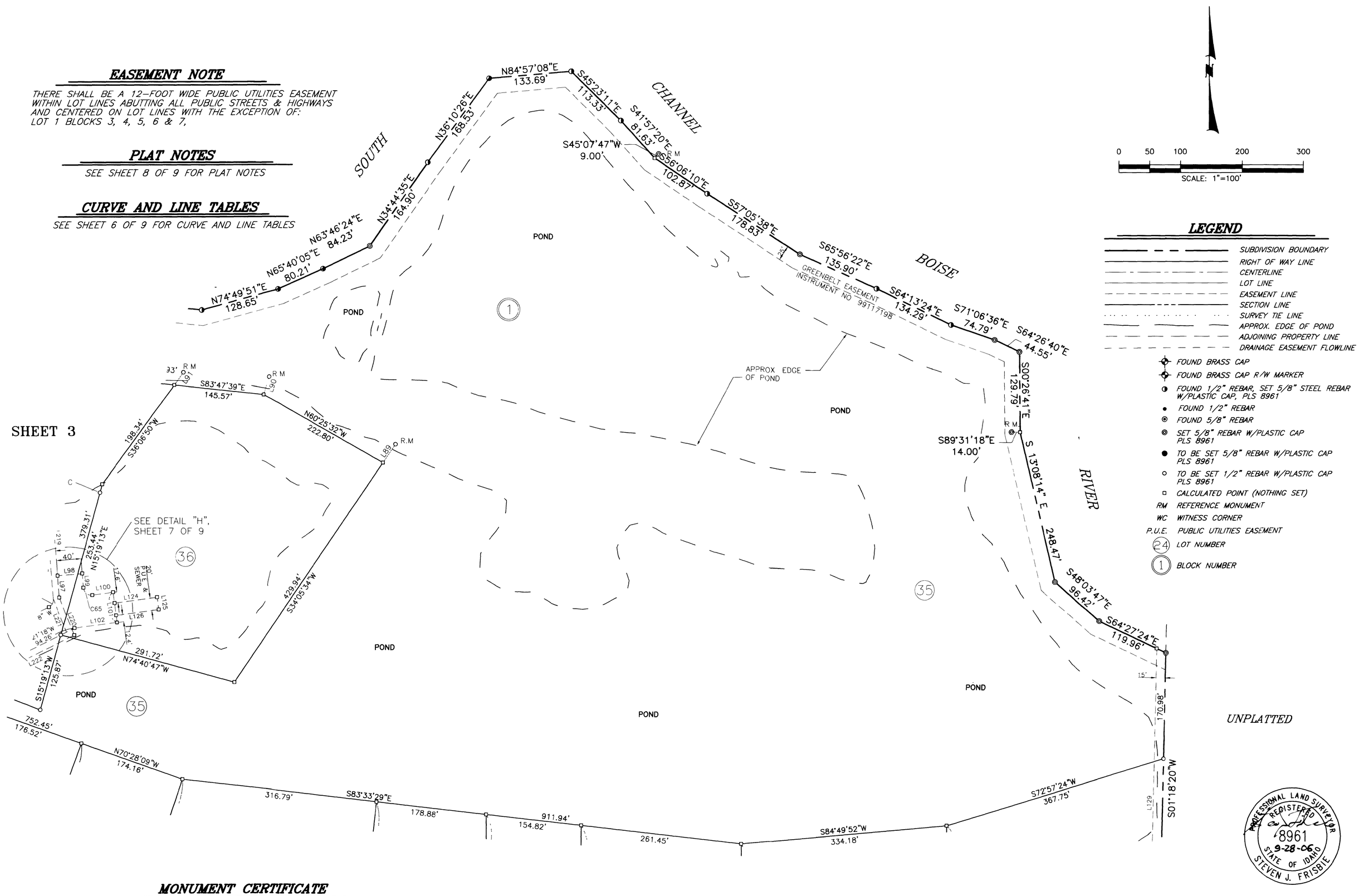

LEGEND

- SUBDIVISION BOUNDARY
- RIGHT OF WAY LINE
- CENTERLINE
- LOT LINE
- EASEMENT LINE
- SECTION LINE
- SURVEY TIE LINE
- APPROX. EDGE OF POND
- ADJOINING PROPERTY LINE
- DRAINAGE EASEMENT FLOWLINE
- FOUND BRASS CAP
- FOUND BRASS CAP R/W MARKER
- FOUND 1/2" REBAR, SET 5/8" STEEL REBAR W/PLASTIC CAP, PLS 8961
- FOUND 1/2" REBAR
- FOUND 5/8" REBAR
- SET 5/8" REBAR W/PLASTIC CAP PLS 8961
- TO BE SET 5/8" REBAR W/PLASTIC CAP PLS 8961
- TO BE SET 1/2" REBAR W/PLASTIC CAP PLS 8961
- CALCULATED POINT (NOTHING SET)
- RM REFERENCE MONUMENT
- WC WITNESS CORNER
- P.U.E. PUBLIC UTILITIES EASEMENT
- (24) LOT NUMBER
- (1) BLOCK NUMBER

SHEET 3

SHEET 5

PROFESSIONAL LAND SURVEYOR REGISTERED 8961 9-28-06 STATE OF IDAHO STEVEN J. FRISBIE

MONUMENT CERTIFICATE

THIS IS TO CERTIFY THAT THIS PLAT IS BEING RECORDED UNDER THE PROVISIONS OF IDAHO CODE 50-1331 THROUGH 50-1333 AND THAT ALL INTERIOR MONUMENTS WILL BE SET WITHIN ONE YEAR FROM THE RECORDING DATE OF THIS PLAT.

TOOTHMAN-ORTON ENGINEERING COMPANY

9777 CHINDEN BOULEVARD
BOISE, IDAHO 83714
(208) 323-2288

H:\03220\CADDWG\SURVEY\FINAL PLAT SHT4.dwg

BK 96 Pg 11959

COAST TO COAST SUBDIVISION

EASEMENT NOTE

THERE SHALL BE A 12-FOOT WIDE PUBLIC UTILITIES EASEMENT WITHIN LOT LINES ABUTTING ALL PUBLIC STREETS & HIGHWAYS AND CENTERED ON LOT LINES WITH THE EXCEPTION OF: LOT 1 BLOCKS 3, 4, 5, 6 & 7,

PLAT NOTES

SEE SHEET 8 OF 9 FOR PLAT NOTES

CURVE AND LINE TABLES

SEE SHEET 6 OF 9 FOR CURVE AND LINE TABLES

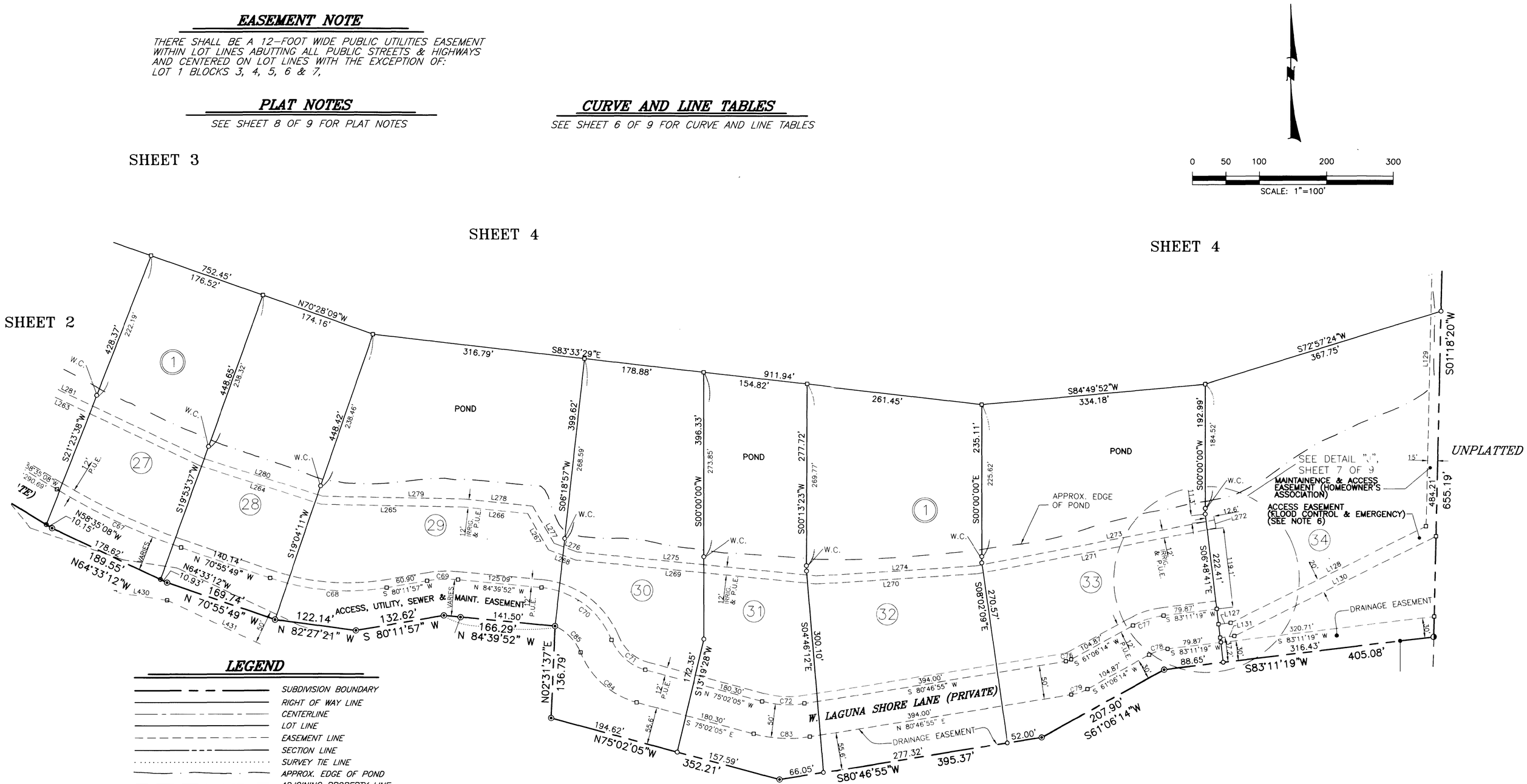

LEGEND

- SUBDIVISION BOUNDARY
- RIGHT OF WAY LINE
- CENTERLINE
- LOT LINE
- EASEMENT LINE
- SECTION LINE
- SURVEY TIE LINE
- APPROX. EDGE OF POND
- ADJOINING PROPERTY LINE
- DRAINAGE EASEMENT FLOWLINE
- FOUND BRASS CAP
- FOUND BRASS CAP R/W MARKER
- FOUND 1/2" REBAR, SET 5/8" STEEL REBAR W/PLASTIC CAP, PLS 8961
- FOUND 1/2" REBAR
- FOUND 5/8" REBAR
- SET 5/8" REBAR W/PLASTIC CAP PLS 8961
- TO BE SET 5/8" REBAR W/PLASTIC CAP PLS 8961
- TO BE SET 1/2" REBAR W/PLASTIC CAP PLS 8961
- CALCULATED POINT (NOTHING SET)
- RM REFERENCE MONUMENT
- WC WITNESS CORNER
- P.U.E. PUBLIC UTILITIES EASEMENT
- (24) LOT NUMBER
- (1) BLOCK NUMBER

PROFESSIONAL LAND SURVEYOR REGISTERED 8961 9-28-05 STATE OF IDAHO STEVEN J. FRISBIE

UNPLATTED

MONUMENT CERTIFICATE

THIS IS TO CERTIFY THAT THIS PLAT IS BEING RECORDED UNDER THE PROVISIONS OF IDAHO CODE 50-1331 THROUGH 50-1333 AND THAT ALL INTERIOR MONUMENTS WILL BE SET WITHIN ONE YEAR FROM THE RECORDING DATE OF THIS PLAT.

TOOTHMAN-ORTON ENGINEERING COMPANY
9777 CHINDEN BOULEVARD
BOISE, IDAHO 83714
(208) 323-2288

H:\03020\ACADDWG\SURVEY\FINAL PLAT SHT5.dwg

BK 96 Pg 11960

COAST TO COAST SUBDIVISION

LINE AND CURVE TABLES

LINE TABLE		
LINE	LENGTH	BEARING
L1 – L65	SEE SHEET 1	
L66	22.09'	S62°42'02"E
L67	52.51'	S04°52'30"E
L68	46.18'	N79°54'59"E
L69	14.46'	N58°46'24"W
L70	14.59'	S58°46'24"E
L71	16.72'	N05°49'31"E
L72	27.67'	N06°00'15"W
L73	32.54'	N27°18'02"E
L74	32.12'	S68°15'43"W
L75	59.17'	N68°15'43"E
L76	41.81'	S55°49'40"E
L77	38.05'	S54°38'08"E
L78	50.00'	S21°07'05"W
L79	35.25'	N83°49'00"W
L80	6.39'	N06°43'09"E
L81	65.58'	S06°43'09"W
L82	30.00'	N46°16'40"E
L83	11.47'	S67°59'19"E
L84	14.25'	S08°09'02"E
L85	41.28'	N51°20'21"E
L86	10.00'	S38°39'39"E
L87	42.71'	S51°20'21"W
L88	82.81'	S43°43'20"E
L89	36.00'	S34°05'34"W
L90	30.00'	S17°53'25"W
L91	25.00'	S36°06'50"W
L92	30.00'	S12°40'58"W
L93	35.00'	S33°33'34"W
L94	15.12'	S67°59'19"E
L95	42.89'	S26°46'49"W
L96	51.27'	S68°52'55"E
L97	35.42'	N04°37'19"W
L98	40.00'	N85°22'41"E
L99	22.84'	S04°37'19"E
L100	33.68'	N82°21'10"E
L101	50.00'	S07°38'50"E
L102	69.56'	S82°21'10"W
L103	103.29'	S83°37'30"E
L104	103.29'	S83°37'30"E
L107	30.00'	S40°59'19"W
L108	25.00'	S35°21'52"W
L109	30.00'	S37°18'37"W
L110	98.01'	S88°48'54"E
L111	98.01'	N88°48'54"W
L112	79.02'	N35°21'52"E
L113	76.53'	N36°44'19"W
L114	206.12'	N08°19'21"W
L115	50.00'	N81°40'39"E
L116	131.12'	S08°19'21"E
L117	112.93'	S36°44'19"E
L118	25.00'	S68°11'43"E
L119	35.00'	N81°40'39"E
L120	50.00'	S08°19'21"E
L121	138.84'	S35°21'52"W
L122	25.47'	N43°39'59"W
L123	25.47'	N43°39'59"W
L124	70.00'	N82°21'10"E
L125	20.00'	S07°38'50"E
L126	70.00'	S82°21'10"W
L127	18.06'	N83°11'19"E
L128	325.05'	N63°51'18"E
L129	497.63'	N01°18'20"E
L130	334.97'	S63°51'18"W
L131	21.46'	S83°11'19"W
L132	5.04'	N70°28'09"W
L133	35.00'	S81°40'39"W
L134	NOT USED	
L135	NOT USED	
L136	NOT USED	
L137	16.33'	S67°59'19"E
L138	13.78'	N42°49'36"E
L139	13.30'	N42°41'09"E
L134 – L199	NOT USED	

IRRIGATION EASEMENT LINE TABLE		
LINE	LENGTH	BEARING
L200	200.44'	N52°02'55"E
L201	387.77'	N45°04'28"E
L202	269.32'	N89°55'32"W
L203	135.97'	N81°49'28"E
L204	52.50'	S64°23'27"E
L205	114.60'	S06°00'15"E
L206	107.01'	N06°00'15"W
L207	44.50'	N64°23'27"W
L208	133.19'	S81°49'28"W
L209	265.22'	N89°55'32"W
L210	383.53'	S45°04'28"W
L211	203.25'	S52°02'55"W
L212	145.21'	N33°52'38"E
L213	287.14'	S29°26'23"E
L214	52.92'	S71°45'35"W
L215	248.96'	S44°52'20"E
L216	209.64'	S77°20'37"E
L217	34.62'	S55°04'33"W
L218	81.03'	S05°22'13"W
L219	98.07'	S04°37'19"E
L220	66.37'	S21°25'47"E
L221	58.72'	N21°25'47"W
L222	88.80'	S63°21'18"W
L223	264.47'	N68°52'55"W
L224	52.59'	S71°45'35"W
L225	78.68'	S44°03'07"W
L226	105.95'	N72°37'08"W
L227	166.00'	N53°05'55"W
L228	86.21'	N63°37'52"W
L229	317.53'	N70°27'44"W
L230	61.88'	S66°49'51"W
L231	75.75'	S56°43'15"W
L232	44.73'	S21°48'27"W
L233	39.31'	S55°04'33"W
L234	181.29'	N79°53'21"W
L235	184.87'	S79°53'21"E
L236	89.01'	S05°22'13"W
L237	43.99'	N21°48'27"E
L238	80.58'	N56°43'15"E
L239	67.63'	N66°49'51"E
L240	324.05'	S70°27'44"E
L241	166.73	S53°05'55"E
L242	97.61'	S72°37'08"E
L243	77.06'	N44°03'07"E
L244	84.16'	S63°37'52"E
L245	273.26'	S68°52'55"E
L246	123.92'	N23°04'35"E
L247	125.95'	N04°37'19"W
L248	167.19'	N21°13'36"E
L249	306.69'	N28°11'21"E
L250	15.93'	S78°29'16"W
L251	206.39'	N77°20'37"W
L252	254.08'	N44°52'20"W
L253	50.86'	N28°11'21"E
L254	271.54'	N29°26'23"W
L255	135.67'	S33°52'38"W
L256	118.19'	S09°51'04"W
L257	47.32'	S36°09'35"E
L258	95.18'	S79°09'43"E
L259	138.88'	S56°02'12"E
L260	65.59'	S71°37'55"E
L261	337.84'	S82°53'52"E
L262	163.40'	S68°38'23"E
L263	448.99'	S64°38'09"E
L264	189.24'	S72°11'03"E
L265	211.72'	S89°05'50"W
L266	96.10'	S84°12'28"W
L267	61.94'	S29°48'37"E
L268	43.19'	S70°00'24"E
L269	359.01'	S84°20'02"E
L270	240.46'	N86°40'28"E
L271	362.34'	N79°11'01"E
L272	12.00'	N10°57'48"W
L273	361.58'	S79°11'01"W
L274	238.73'	S86°11'47"W
L275	356.51'	S84°20'02"E
L276	37.29'	N70°00'24"W
L277	63.72'	N29°48'37"W
L278	102.78'	N84°12'28"W
L279	210.45'	N89°05'50"W

IRRIGATION EASEMENT LINE TABLE (CONT'D.)		
LINE	LENGTH	BEARING
L280	186.66'	N72°11'03"W
L281	448.62'	N64°38'09"W
L282	164.45'	N68°38'23"W
L283	81.51'	N74°41'46"W
L284	80.01'	S74°41'46"E
L285	89.83'	N82°03'00"E
L286	10.00'	S07°57'00"E
L287	337.51'	N82°53'52"W
L288	62.77'	N71°37'55"W
L289	139.69'	N56°02'12"W
L290	92.91'	N79°09'43"W
L291	37.50'	N36°09'35"W
L292	116.19'	N09°51'04"E
L293	23.37'	S03°07'50"W
L294	39.21'	S75°31'38"E
L295	41.16'	N83°49'00"W
L296	205.41'	S44°57'08"W
L297	273.48'	S88°59'19"W
L298	113.53'	N66°55'25"W
L299	393.87'	N57°29'57"W
L300	112.44'	N37°16'38"W
L301	242.80'	N72°07'55"W
L302	15.02'	S72°03'07"W
L303	12.79'	N72°03'07"E
L304	235.15'	S72°07'55"E
L305	110.81'	S37°16'38"E
L306	397.00'	S57°29'57"E
L307	117.08'	S66°55'25"E
L308	280.89'	N88°59'19"E
L309	204.51'	N44°57'08"E
L310	43.71'	S83°49'00"E
L311	63.72'	N06°43'09"E
L312	96.02'	N26°46'49"E
L313	96.47'	S26°46'49"W
L314	53.58'	S06°43'09"W
L315	20.57'	N06°43'09"E
L316	183.59'	N26°46'49"E
L317	29.90'	S67°59'19"E
L318	39.37'	N81°40'39"E
L319	33.80'	S81°40'39"W
L320	118.85'	S08°19'21"E
L321	83.81'	S36°44'19"E
L322	112.16'	S35°21'52"W
L323	43.89'	S87°19'52"E
L324	10.30'	S42°32'23"E
L325	19.15'	S42°32'23"E
L326	46.98'	S87°19'52"E
L327	29.99'	S75°31'38"E
L328	15.52'	S03°07'50"W
L329	10.02'	N72°03'07"E
L330 – L399	NOT USED	

DRAINAGE EASEMENT LINE TABLE		
LINE	LENGTH	BEARING
L400	65.15'	N77°35'11"W
L401	69.78'	N72°14'00"W
L402	114.11'	N28°55'43"W
L403	151.21'	N54°53'55"W
L404	30.63'	N25°46'22"W
L405	91.61'	N52°23'04"W
L406	96.88'	N76°03'14"W
L407	79.39'	N60°28'30"W
L408	130.05'	N62°11'17"W
L409	76.79'	N58°10'50"W
L410	73.39'	N72°27'32"W
L411	89.87'	N88°45'01"W
L412	54.86'	N75°39'10"W
L413	23.72'	N50°58'27"W
L414	101.55'	N36°13'17"W
L415	62.17'	N67°17'22"W
L416	35.85'	N86°36'00"W
L417	28.54'	N76°54'34"E
L418	60.16'	N43°53'42"E
L419	63.33'	N30°30'19"E
L420	153.16'	N42°44'15"E
L421	85.83'	N38°53'36"E
L422	39.12'	N52°36'21"E
L423	53.64'	N75°37'17"E
L424	79.29'	N78°30'33"W
L425	36.39'	N55°23'40"W
L426	70.98'	N42°51'29"W
L427	74.72'	N66°12'39"W
L428	105.47'	N39°09'05"W
L429	164.26'	N71°04'38"W
L430	78.75'	N81°09'16"W
L431	199.09'	N64°44'11"W
L432	51.75'	N72°32'46"W

CURVE TABLE						
CURVE	LENGTH	RADIUS	DELTA	TANGENT	CHORD	BEARING
C1	45.58'	100.00'	26°06'52"	23.19'	45.18'	S75°45'28"E
C2	424.11'	180.00'	134°59'52"	434.53'	332.59'	N28°52'34"E
C3	56.98'	75.00'	43°31'46"	29.94'	55.62'	N16°51'29"W
C4	379.28'	250.00'	86°55'30"	236.93'	343.94'	N38°35'15"E
C5	60.32'	200.00'	17°16'45"	30.39'	60.09'	S89°18'37"E
C6	169.33'	180.00'	53°53'54"	91.51'	163.15'	N31°49'27"W
C7	106.66'	200.00'	30°33'22"	54.63'	105.40'	N74°03'05"W
C8	28.15'	150.00'	10°45'15"	14.12'	28.11'	S85°17'37"W
C9	14.59'	16.50'	50°39'21"	7.81'	14.12'	S65°51'25"W
C10	194.24'	218.50'	50°56'01"	104.06'	187.91'	S70°54'29"W
C11	28.43'	16.50'	98°44'21"	19.23'	25.04'	S47°00'19"W
C12	136.24'	281.50'	27°43'49"	69.48'	134.92'	S11°30'03"W
C13	120.65'	281.50'	24°33'21"	61.26'	119.72'	S37°38'38"W
C14	30.21'	281.50'	6°08'58"	15.12'	30.20'	S52°59'48"W
C15	117.48'	281.50'	23°54'45"	59.61'	116.63'	S68°01'40"W
C16	10.51'	14.50'	41°31'33"	5.50'	10.28'	S61°17'14"W
C17	39.79'	59.00'	38°38'22"	20.68'	39.04'	S59°50'38"W
C18	95.30'	59.00'	92°32'42"	61.68'	85.27'	N54°33'50"W
C19	52.13'	59.00'	50°37'40"	27.91'	50.45'	N17°01'21"E
C20	102.47'	59.00'	99°30'43"	69.71'	90.07'	S87°54'27"E
C21	15.13'	14.50'	59°47'54"	8.34'	14.46'	S68°03'03"E
C22	90.78'	218.50'	23°48'18"	46.06'	90.13'	N70°08'51"E
C23	30.32'	218.50'	7°57'01"	15.18'	30.29'	N54°16'12"E
C24	210.39'	218.50'	55°10'11"	114.16'	202.36'	N22°42'36"E
C25	63.54'	148.50'	24°31'02"	32.27'	63.06'	N17°08'01"W
C26	10.12'	148.50'	3°54'22"	5.06'	10.12'	N31°20'43"W
C27	66.03'	148.50'	25°28'30"	33.57'	65.48'	N46°02'09"W
C28	89.86'	168.50'	30°33'22"	46.03'	88.80'	N74°03'05"W
C29	14.33'	14.50'	56°36'24"	7.81'	13.75'	S57°31'05"W
C30	66.87'	59.00'	64°56'01"	37.54'	63.34'	S61°40'53"W
C31	103.91'	59.00'	100°54'36"	71.46'	90.99'	N35°23'48"W
C32	NOT USED					
C33	119.91'	59.00'	116°26'42"	95.24'	100.31'	N73°16'51"E
C34	12.21'	14.50'	48°14'57"	6.49'	11.85'	S72°37'16"E
C35	23.49'	181.50'	7°24'59"	11.76'	23.48'	N86°57'45"E
C36	104.30'	231.50'	25°48'52"	53.05'	103.42'	S71°40'50"E
C37	65.05'	211.50'	17°37'16"	32.78'	64.79'	S49°57'46"E
C38	94.14'	211.50'	25°30'14"	47.87'	93.37'	S28°24'01"E
C39	10.01'	211.50'	2°42'47"	5.01'	10.01'	S14°17'30"E
C40	29.75'	211.50'	8°03'37"	14.90'	29.73'	S08°54'18"E
C41	22.68'	16.50'	78°45'00"	13.54'	20.93'	S44°15'00"E
C42	132.59'	141.50'	53°41'21"	71.61'	127.79'	N69°31'50"E
C43	80.91'	106.50'	43°31'46"	42.52'	78.98'	N16°51'29"W
C44	33.05'	43.50'	43°31'46"	17.37'	32.26'	S16°51'29"E
C45	192.74'	211.50'	52°12'51"	103.65'	186.14'	S12°30'57"E
C46	29.49'	16.50'	102°24'23"	20.52'	25.72'	S37°36'43"E
C47	103.78'	134.62'	44°10'10"	54.62'	101.23'	S16°51'29"E
C48	59.54'	118.77'	28°43'20"	30.41'	58.92'	S24°11'45"E
C49	82.78'	101.75'	46°36'51"	43.83'	80.52'	S19°31'11"W
C50	104.46'	111.46'	53°41'52"	56.42'	100.68'	N69°40'32"E
C51	19.16'	231.50'	4°44'30"	9.58'	19.15'	S86°57'31"E
C52			NOT USED			
C53	10.82'	225.00'	2°45'15"	5.41'	10.81'	N17°32'24"W
C54	36.00'	75.00'	27°30'13"	18.35'	35.66'	N29°54'52"W
C55	33.01'	75.00'	25°12'56"	16.78'	32.74'	N56°16'27"W
C56	55.01'	125.00'	25°12'56"	27.96'	54.57'	S56°16'27"E
C57	22.59'	125.00'	10°21'17"	11.33'	22.56'	S38°29'20"E
C58	37.41'	125.00'	17°08'56"	18.85'	37.27'	S24°44'14"E
C59	102.90'	175.00'	33°41'24"	52.99'	101.42'	S33°00'28"E
C60	43.97'	175.00'	14°23'42"	22.10'	43.85'	S57°03'01"E
C61	24.73'	100.00'	14°10'14"	12.43'	24.67'	N89°05'53"E
C62	145.88'	175.00'	47°45'46"	77.48'	141.70'	S87°14'11"W
C63	187.56'	225.00'	47°45'46"	99.62'	182.18'	S87°14'11"W
C64	15.42'	13.00'	67°58'37"	8.76'	14.53'	S29°22'00"W
C65	21.11'	13.00'	93°01'34"	13.71'	18.86'	S51°08'03"E

CURVE TABLE (CONT'D)						
CURVE	LENGTH	RADIUS	DELTA	TANGENT	CHORD	BEARING
C66	80.50'	175.61'	26°15'45"	40.97'	79.79'	N70°39'48"W
C67	204.68'	950.00'	12°20'41"	102.74'	204.29'	N64°45'28"W
C68	176.36'	350.00'	28°52'14"	90.09'	174.50'	N85°21'56"W
C69	46.23'	175.00'	15°08'12"	23.25'	46.10'	S87°46'02"W
C70	136.72'	125.00'	62°39'59"	76.10'	130.00'	N53°19'52"W
C71	69.43'	75.00'	53°02'13"	37.42'	66.97'	N48°30'59"W
C72	63.31'	150.00'	24°11'00"	32.13'	62.84'	N87°07'35"W
C73	NOT USED					
C74	NOT USED					
C75	NOT USED					
C76	8.59'	25.00'	19°40'41"	4.34'	8.54'	S70°56'34"W
C77	48.18'	125.00'	22°05'05"	24.39'	47.88'	S72°08'46"W
C78	28.91'	75.00'	22°05'05"	14.64'	28.73'	S72°08'46"W
C79	25.76'	75.00'	19°40'41"	13.01'	25.63'	S70°56'34"W
C80	NOT USED					
C81	NOT USED					
C82	85.56'	221.50'	22°07'54"	43.32'	85.03'	S03°31'16"E
C83	84.42'	200.00'	24°11'00"	42.85'	83.79'	S87°07'35"E
C84	115.71'	125.00'	53°02'13"	62.37'	111.62'	S48°30'59"E
C85	55.97'	71.59'	44°47'49"	29.50'	54.56'	S43°59'03"E
C86	12.57'	4.00'	180°00'00"	INFINITE	8.00'	N41°42'12"W
C87	127.18'	184.00'	39°36'09"	66.25'	124.66'	N68°05'52"E
C88	12.57'	4.00'	179°59'52"	INFINITE	8.00'	S02°06'04"E
C89	121.65'	176.00'	39°36'08"	63.37'	119.24'	S68°05'52"W
C90	12.57'	4.00'	180°00'06"	INFINITE	8.00'	N06°22'30"E
C91	12.57'	4.00'	179°59'55"	INFINITE	8.00'	S06°22'30"W
C92	10.03'	118.50'	4°50'57"	5.02'	10.03'	S88°14'46"W
C93	10.15'	281.50'	2°03'58"	5.08'	10.15'	S81°01'01"W
C94	195.72'	134.36'	83°27'35"	119.84'	178.87'	N00°57'22"E
C95	6.28'	4.00'	90°00'00"	4.00'	5.66'	S43°48'54"E
C96	18.73'	218.50'	04°54'44"	9.37'	18.73'	S42°59'07"W
C97	12.57'	4.00'	180°00'00"	INFINITE	8.00'	N01°11'06"E
C98	6.28'	4.00'	90°00'00"	4.00'	5.66'	S46°11'06"W
C99	111.74'	225.00'	28°27'18"	57.05'	110.60'	N51°58'14"W
C100	73.93'	225.00'	18°49'34"	37.30'	73.60'	N28°19'48"W
C101	61.99'	125.00'	28°24'58"	31.65'	61.36'	N22°31'50"W
C102	37.20'	75.00'	28°24'58"	18.99'	36.82'	S22°31'50"E

PROFESSIONAL LAND SURVEYOR REGISTERED 8961 9-28-06 STATE OF IDAHO STEVEN J. FRISBIE

TOOTHMAN-ORTON ENGINEERING COMPANY
9777 CHINDEN BOULEVARD
BOISE, IDAHO 83714
(208) 323-2288

H:\03020\ACADDWG\SURVEY\FINAL PLAT\TABLES SHT6.dwg

BK96 Pg 11961

COAST TO COAST SUBDIVISION

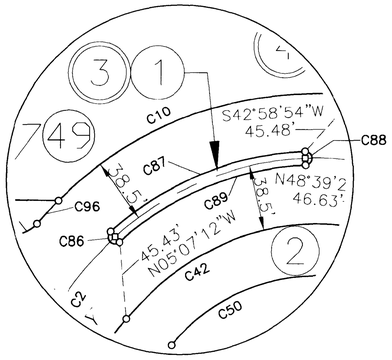

DETAIL "A"

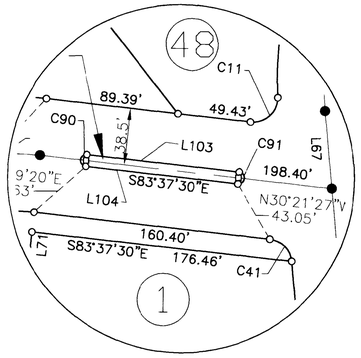

DETAIL "B"

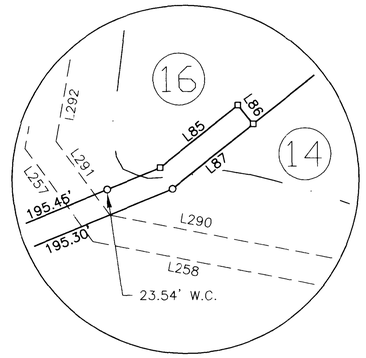

DETAIL "C"

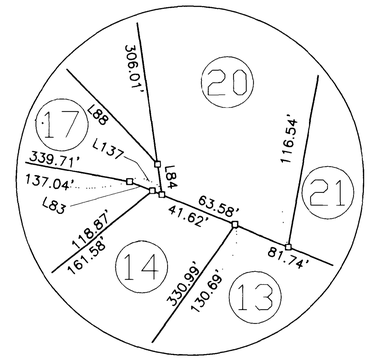

DETAIL "D"

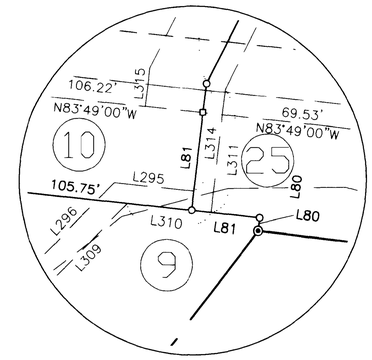

DETAIL "E"

N.T.S.

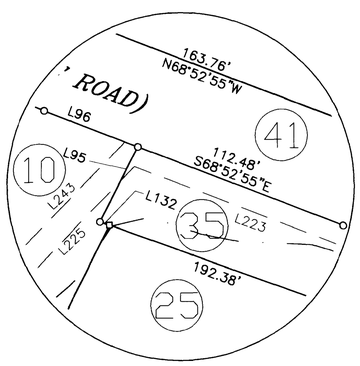

DETAIL "F"

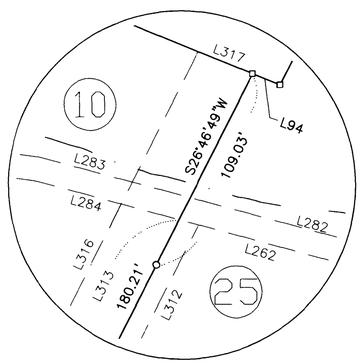

DETAIL "G"

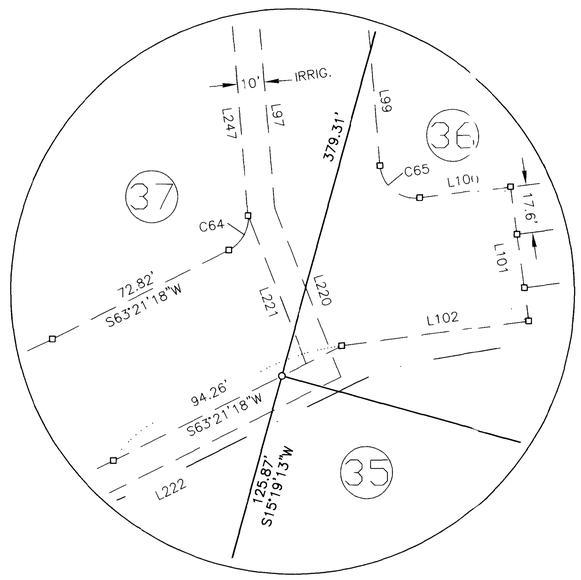

DETAIL "H"

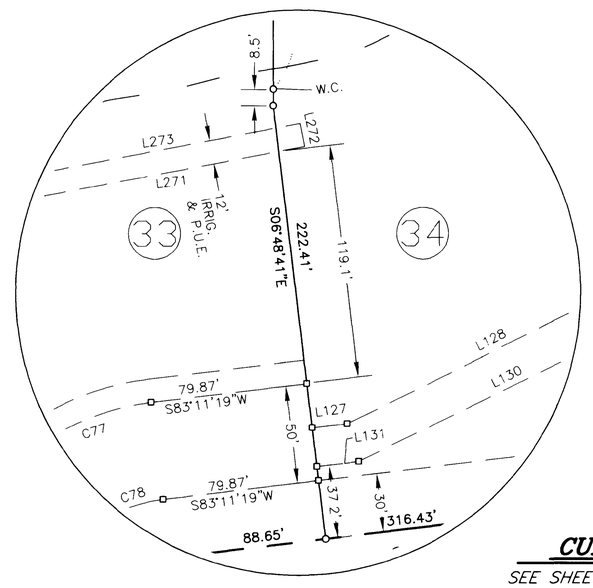

DETAIL "J"

CURVE AND LINE TABLES

SEE SHEET 6 OF 9 FOR CURVE AND LINE TABLES

PLAT NOTES

SEE SHEET 8 OF 9 FOR PLAT NOTES

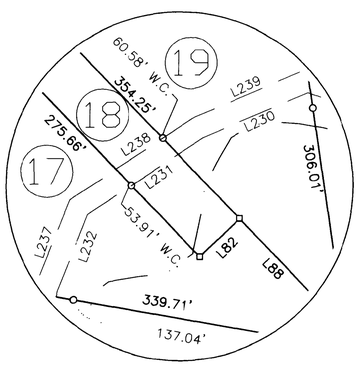

DETAIL "K"

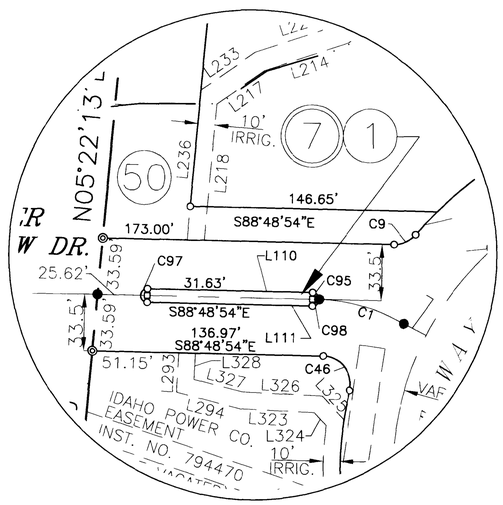

DETAIL "L"

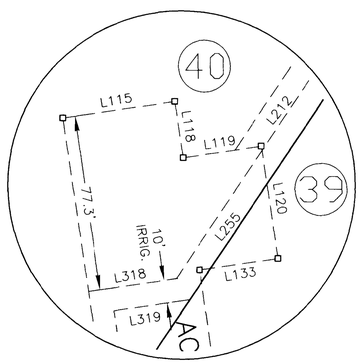

DETAIL "M"

MONUMENT CERTIFICATE

THIS IS TO CERTIFY THAT THIS PLAT IS BEING RECORDED UNDER THE PROVISIONS OF IDAHO CODE 50-1331 THROUGH 50-1333 AND THAT ALL INTERIOR MONUMENTS WILL BE SET WITHIN ONE YEAR FROM THE RECORDING DATE OF THIS PLAT.

PROFESSIONAL LAND SURVEYOR REGISTERED 8961 9-8-06 STATE OF IDAHO STEVEN J. FRISBIE

TOOTHMAN-ORTON ENGINEERING COMPANY

9777 CHINDEN BOULEVARD
BOISE, IDAHO 83714
(208) 323-2288

H:\03020\ACADDWG\SURVEY\FINAL PLAT\SHT7.dwg

COAST TO COAST SUBDIVISION

CERTIFICATE OF OWNERS

KNOW ALL MEN BY THESE PRESENTS, THAT THE UNDERSIGNED ARE THE OWNERS OF THE PROPERTY HEREINAFTER DESCRIBED.

A PARCEL OF LAND BEING A PORTION OF GOVERNMENT LOTS 2, 3, AND 4, OF SECTION 21, A PORTION OF GOVERNMENT LOT 6, AND A PORTION OF THE SW1/4 OF THE SW1/4 OF SECTION 16, TOWNSHIP 4 NORTH, RANGE 1 EAST, BOISE MERIDIAN, ADA COUNTY, IDAHO. SAID PARCEL OF LAND BEING A RESURVEY OF THAT CERTAIN 117.51 ACRE PARCEL OF LAND AS SHOWN ON RECORD OF SURVEY NO. 3921, ADA COUNTY RECORDS, MORE PARTICULARLY DESCRIBED AS FOLLOWS:

COMMENCING AT THE NORTHWEST CORNER OF SAID SECTION 21, FROM WHICH CORNER, THE EAST ONE-QUARTER CORNER OF SAID SECTION 21 BEARS, S.01°11'40"W., 2625.95 FEET; THENCE, ALONG THE WESTERLY LINE OF SAID SECTION 21,
A) S.01°11'40"W., 954.12 FEET; THENCE,
B) N.68°03'51"E., 141.48 FEET TO THE **POINT OF BEGINNING** AT THE INTERSECTION OF THE EASTERLY RIGHT-OF-WAY LINE OF N. EAGLE ROAD WITH THE SOUTH BANK OF THE SOUTH CHANNEL OF THE BOISE RIVER; THENCE, ALONG SAID SOUTH BANK THROUGH THE FOLLOWING COURSES:
1) N.68°03'51"E., 141.90 FEET; THENCE,
2) N.62°29'01"E., 59.77 FEET; THENCE,
3) N.58°49'39"E., 101.41 FEET; THENCE,
4) N.39°02'56"E., 95.80 FEET; THENCE,
5) N.50°12'34"E., 93.52 FEET; THENCE,
6) N.48°19'28"E., 108.52 FEET; THENCE,
7) N.27°15'15"E., 144.52 FEET; THENCE,
8) N.60°31'27"E., 108.31 FEET; THENCE,
9) N.40°35'06"E., 145.83 FEET; THENCE,
10) N.60°22'42"E., 91.62 FEET; THENCE,
11) N.55°43'13"E., 143.71 FEET; THENCE,
12) N.50°21'55"E., 178.69 FEET; THENCE,
13) N.33°25'52"E., 77.65 FEET; THENCE,
14) N.71°50'37"E., 122.00 FEET; THENCE,
15) S.74°46'37"E., 142.78 FEET; THENCE,
16) S.52°47'44"E., 178.18 FEET; THENCE,
17) S.13°20'20"E., 72.01 FEET; THENCE,
18) S.39°53'42"E., 102.52 FEET; THENCE,
19) S.43°51'39"E., 88.11 FEET; THENCE,
20) S.51°11'01"E., 119.53 FEET; THENCE,
21) S.40°02'22"E., 90.92 FEET; THENCE,
22) S.71°11'18"E., 86.49 FEET; THENCE,
23) S.23°20'08"E., 100.81 FEET; THENCE,
24) S.56°23'45"E., 97.09 FEET; THENCE,
25) S.74°59'31"E., 120.47 FEET; THENCE,
26) S.80°50'51"E., 96.57 FEET; THENCE,
27) S.84°01'21"E., 72.41 FEET; THENCE,
28) N.74°49'51"E., 128.65 FEET; THENCE,
29) N.65°40'05"E., 80.21 FEET; THENCE,
30) N.63°46'24"E., 84.23 FEET; THENCE,
31) N.34°44'35"E., 164.90 FEET; THENCE,
32) N.36°10'26"E., 168.53 FEET; THENCE,
33) N.84°57'08"E., 133.69 FEET; THENCE,
34) S.45°23'11"E., 113.33 FEET; THENCE,
35) S.41°57'20"E., 81.63 FEET; THENCE,
36) S.56°06'10"E., 102.87 FEET; THENCE,
37) S.57°05'38"E., 178.83 FEET; THENCE,
38) S.65°56'22"E., 135.90 FEET; THENCE,
39) S.64°13'24"E., 134.29 FEET; THENCE,
40) S.71°06'36"E., 74.79 FEET; THENCE,
41) S.64°26'40"E., 44.55 FEET; THENCE,
42) S.00°26'41"E., 129.79 FEET; THENCE,
43) S.13°08'14"E., 248.47 FEET; THENCE,
44) S.48°03'47"E., 96.42 FEET; THENCE,
45) S.64°27'24"E., 119.96 FEET TO A POINT ON THE EASTERLY LINE OF SAID LOT 2, THENCE, LEAVING SAID SOUTH BANK, ALONG SAID LINE,

PROFESSIONAL LAND SURVEYOR REGISTERED 8961 9-28-06 STATE OF IDAHO STEVEN J. FRISBIE

CONT'D

46) S.01°18'20"W., 655.19 FEET; THENCE,
47) S.83°11'19"W., 405.08 FEET; THENCE,
48) S.61°06'14"W., 207.90 FEET; THENCE,
49) S.80°46'55"W., 395.37 FEET; THENCE,
50) N.75°02'05"W., 352.21 FEET; THENCE,
51) N.02°31'37"E., 136.79 FEET; THENCE,
52) N.84°39'52"W., 166.29 FEET; THENCE,
53) S.80°11'57"W., 132.62 FEET; THENCE,
54) N.82°27'21"W., 122.14 FEET; THENCE,
55) N.70°55'49"W., 169.74 FEET; THENCE,
56) N.64°33'12"W., 189.55 FEET; THENCE,
57) N.58°35'08"W., 335.96 FEET; THENCE,
58) N.83°16'51"W., 70.71 FEET; THENCE,
59) S.37°21'41"W., 427.06 FEET; THENCE,
60) S.70°15'47"W., 79.45 FEET; THENCE,
61) N.77°31'41"W., 85.93 FEET; THENCE,
62) N.66°43'35"W., 229.53 FEET; THENCE,
63) N.60°39'03"W., 305.31 FEET; THENCE,
65) N.66°55'28"W., 91.88 FEET; THENCE,
66) N.70°58'15"W., 256.39 FEET; THENCE,
67) N.04°54'24"E., 60.95 FEET; THENCE,
68) N.55°46'25"W., 300.86 FEET TO SAID EASTERLY RIGHT-OF-WAY LINE OF EAGLE ROAD; THENCE, ALONG SAID LINE,
69) N.05°22'13"E., 377.49 FEET TO THE **POINT OF BEGINNING**.

CONTAINING 117.23 ACRES, MORE OR LESS.

IT IS THE INTENTION OF THE UNDERSIGNED TO HEREBY INCLUDE THE ABOVE DESCRIBED PROPERTY IN THIS PLAT. THE PUBLIC STREETS SHOWN ON THIS PLAT ARE HEREBY DEDICATED TO THE PUBLIC. THE EASEMENTS AND PRIVATE ROADS AS SHOWN ON THIS PLAT ARE NOT DEDICATED TO THE PUBLIC. HOWEVER, THE RIGHT TO USE SAID EASEMENTS IS HEREBY RESERVED FOR PUBLIC UTILITIES AND FOR ANY OTHER USES AS DESIGNATED HEREON.

ALL OF THE LOTS IN THE PLAT WILL BE ELIGIBLE TO RECEIVE DOMESTIC, NON-IRRIGATION WATER SERVICE FROM THE CITY OF EAGLE, AND SAID CITY HAS AGREED IN WRITING TO SERVE ALL OF THE LOTS IN THIS SUBDIVISION.

IN WITNESS WHEREOF, I HAVE HEREUNTO SET MY HAND THIS 27TH DAY OF September, 2006.

COAST 2 COAST, L.L.C., an Idaho limited liability company

BY: CRESTON THORNTON, MANAGER

ACKNOWLEDGMENT

STATE OF IDAHO }
COUNTY OF ADA } S.S.

ON THIS 27TH DAY OF SEPT., 2006, BEFORE ME, THE UNDERSIGNED, A NOTARY PUBLIC IN AND FOR SAID STATE, PERSONALLY APPEARED, CRESTON THORNTON, KNOWN OR IDENTIFIED TO ME TO BE A MANAGING MEMBER OF THE LIMITED LIABILITY COMPANY THAT EXECUTED THE INSTRUMENT OR THE PERSON WHO EXECUTED THE INSTRUMENT ON BEHALF OF SAID LIMITED LIABILITY COMPANY AND ACKNOWLEDGED TO ME THAT SUCH LIMITED LIABILITY COMPANY EXECUTED THE SAME.

IN WITNESS WHEREOF, I HEREUNTO SET MY HAND AND AFFIXED MY OFFICIAL SEAL THE DAY AND YEAR IN THIS CERTIFICATE FIRST ABOVE WRITTEN.

NOTARY PUBLIC FOR THE STATE OF IDAHO

DATE 27 SEP 2006 MY COMMISSION EXPIRES 17 JUL 2010

PLAT NOTES

1. THERE SHALL BE NO PARKING ALLOWED WITHIN PRIVATE ROADWAYS (W. RIVERSEDGE LANE & W. LAGUNA SHORE LANE) AS SET FORTH IN ARTICLE 3.9 OF THE DECLARATION OF COVENANTS FOR COAST TO COAST SUBDIVISION.

2. EACH LOT OWNER THAT ABUTS THE PRIVATE ROADWAYS HAS A PERPETUAL RIGHT OF INGRESS, EGRESS, AND REGRESS OVER THE PRIVATE ROADWAYS, AND THE PERPETUAL RIGHT SHALL RUN WITH THE LAND.

3. THE RESTRICTIVE COVENANT FOR MAINTENANCE OF THE PRIVATE ROADWAYS CANNOT BE MODIFIED AND THE HOMEOWNER'S ASSOCIATION CANNOT BE DISSOLVED WITHOUT THE EXPRESS CONSENT OF THE CITY OF EAGLE.

4. THE 25-FOOT WIDE GREENBELT EASEMENT (INSTRUMENT NO. 99117198), BORDERING THE NORTHERN BOUNDARY OF THIS SUBDIVISION, IS FOR THE USE BY THE GENERAL PUBLIC FOR PEDESTRIAN, EQUESTRIAN AND OTHER NON-MOTORIZED ACCESS AND WAS RECORDED IN FAVOR OF THE CITY OF EAGLE.

5. ALL COMMON LOTS ARE TO BE OWNED AND MAINTAINED BY THE HOMEOWNER'S ASSOCIATION.

6. ALL COMMON LOTS 2, 15, 18, 35, 41, AND 50 OF BLOCK 1, LOT 1 BLOCK 2, LOT 1 BLOCK 3, LOT 1 BLOCK 4, LOT 1 BLOCK 5, LOT 1 BLOCK 6, AND LOT 1 BLOCK 7, SHALL BE ENCUMBERED BY A BLANKET PUBLIC UTILITIES EASEMENT, SANITARY SEWER EASEMENT, CITY OF EAGLE STREET LIGHT EASEMENT, IRRIGATION EASEMENT, FLOOD CONTROL DISTRICT NO. 10 ACCESS EASEMENT, AND PRIVATE PEDESTRIAN EASEMENT FOR THE BENEFIT TO LOT OWNERS IN THIS SUBDIVISION.

7. THERE IS A NON-EXCLUSIVE PRIVATE CROSS-ACCESS EASEMENT OVER THE ENTIRE AREA COVERED BY WATER IN THE PONDS BETWEEN ALL LOTS FOR THE BENEFIT OF ALL LOT OWNERS IN THIS SUBDIVISION. ACCESS TO THIS EASEMENT SHALL BE THROUGH COMMON LOTS 15, 18 AND 31 OF BLOCK 1.

8. THIS DEVELOPMENT RECOGNIZES IDAHO CODE 22-4503, RIGHT TO FARM ACT, WHICH STATES: "NO AGRICULTURAL OPERATION OR AN APPURTENANCE TO IT SHALL BE OR BECOME A NUISANCE, PRIVATE OR PUBLIC, BY ANY CHANGED CONDITIONS IN OR ABOUT THE SURROUNDING NONAGRICULTURAL ACTIVITIES AFTER THE SAME HAS BEEN IN OPERATION FOR MORE THAN ONE (1) YEAR, WHEN THE OPERATION WAS NOT A NUISANCE AT THE TIME THE OPERATION BEGAN; PROVIDED, THAT THE PROVISIONS OF THIS SECTION SHALL NOT APPLY WHENEVER A NUISANCE RESULTS IN THE IMPROPER OR NEGLIGENT OPERATION OF ANY AGRICULTURAL OPERATION OR APPURTENANCE TO IT".

9. LOT 2, BLOCK 1; LOT 41, BLOCK 1; AND THE NON-EXCLUSIVE PRIVATE EASEMENTS OVER LOTS 36 & 37, BLOCK 1 AND W. LAGUNA SHORE LANE ARE ENCUMBERED BY A BLANKET PUBLIC UTILITIES, SEWER AND MAINTENANCE EASEMENT.

10. AN EASEMENT EXISTS FOR THE PURPOSE OF PUBLIC ACCESS TO THE BOISE RIVER OVER LOT 49, BLOCK 1. IN ADDITION, THERE ARE 10 (TEN) PARKING STALLS WITHIN LOT 49, BLOCK 1, FOR THE USE OF/BY THE PUBLIC. SEE SHEET 2 OF 9.

11. THE FIVE (5) LOTS (LOTS 30-34, BLOCK 1) ARE LOCATED ADJACENT TO LAND THAT IS OWNED BY THE CITY OF BOISE. THE LAND IS PLANNED FOR POSSIBLE FUTURE EXPANSION OF THE BOISE CITY WASTEWATER TREATMENT FACILITY.

12. MINIMUM BUILDING SETBACK LINES SHALL BE IN ACCORDANCE WITH THE APPLICABLE ZONING AND SUBDIVISION REGULATIONS AT THE TIME OF ISSUANCE OF THE BUILDING PERMIT OR AS SPECIFICALLY APPROVED AND/OR REQUIRED.

13. THE FLOODWAY BOUNDARY IS BASED ON FEMA FLOOD INSURANCE RATE MAPS, NUMBERS 16001C0161 AND 16001C0162, MAPS REVISED, DATED: FEBRUARY 19, 2003. PORTIONS OF LOTS MAY BE WITHIN A FLOODWAY BOUNDARY AS SHOWN ON THE MAPS.

14. NO BUILDINGS OR OTHER STRUCTURES SHALL BE BUILT WITHIN 50 FEET OF THE CURRENT FEMA FLOODWAY BOUNDARY, AS DETERMINED BY THE CITY OF EAGLE.

15. THE IDAHO TRANSPORTATION DEPARTMENT HAS IN ITS CONSTRUCTION PROGRAM A PROJECT TO CONSTRUCT A MEDIAN IN THE CENTER OF EAGLE RD. (STATE HIGHWAY 55) WHICH WILL RESULT IN ONLY RIGHT TURNS INTO AND OUT OF THIS SUBDIVISION.

16. LOTS SHALL NOT BE REDUCED IN SIZE WITHOUT PRIOR APPROVAL FROM THE HEALTH AUTHORITY.

17. NO ADDITIONAL DOMESTIC WATER SUPPLIES SHALL BE INSTALLED BEYOND THE WATER SYSTEM APPROVED IN SANITARY RESTRICTION RELEASE.

18. REFERENCE IS MADE TO PUBLIC HEALTH LETTER ON FILE REGARDING ADDITIONAL RESTRICTIONS.

19. DIVERSION FOR IRRIGATION WATER BETWEEN OCTOBER 31 AND APRIL 1 SHALL OCCUR ONLY AS AUTHORIZED BY THE WATER DISTRICT 63 WATER MASTER AND ONLY WHEN WATER IS BEING RELEASED FOR FLOOD CONTROL BY THE UNITED STATES FROM THE LUCKY PEAK DAM. THE REQUIREMENTS IN IDAHO CODE 31-3805 ARE APPLICABLE. IRRIGATION WATER IS PROVIDED FROM THE BOISE RIVER AND THE GRAHAM-GILBERT DITCH PER WATER RIGHTS OWNED BY THE HOME OWNER'S ASSOCIATION. LOT OWNER'S MAY BE SUBJECT TO AN ASSESSMENT. A REFERENCE TO WATER RIGHT NO. 63-144A IS HEREBY MADE.

TOOTHMAN-ORTON ENGINEERING COMPANY
9777 CHINDEN BOULEVARD
BOISE, IDAHO 83714
(208) 323-2288

H:\03020\ACADDWG\SURVEY\FINAL PLAT\03020-PLAT-SHT-8-9.dwg

COAST TO COAST SUBDIVISION

CERTIFICATE OF COUNTY SURVEYOR

I, THE UNDERSIGNED, REGISTERED PROFESSIONAL SURVEYOR FOR ADA COUNTY, IDAHO, DO HEREBY CERTIFY THAT I HAVE CHECKED THIS PLAT AND THAT IT COMPLIES WITH THE STATE OF IDAHO CODE RELATING TO PLATS AND SURVEYS.

10-05-06

ADA COUNTY PROFESSIONAL SURVEYOR PLS 870

CERTIFICATE OF SURVEYOR

I, STEVEN J. FRISBIE, DO HEREBY CERTIFY THAT I AM A REGISTERED PROFESSIONAL LAND SURVEYOR IN THE STATE OF IDAHO, AND THAT THIS PLAT AS DESCRIBED IN THE "CERTIFICATE OF OWNERS" WAS DRAWN FROM THE FIELD NOTES OF A SURVEY MADE ON THE GROUND UNDER MY DIRECT SUPERVISION AND ACCURATELY REPRESENTS THE POINTS PLATTED HEREON, AND IS IN CONFORMITY WITH THE STATE OF IDAHO CODE RELATING TO PLATS AND SURVEYS.

STEVEN J. FRISBIE
IDAHO PLS NO. 8961

PROFESSIONAL LAND SURVEYOR REGISTERED 8961 2-14-06 STATE OF IDAHO STEVEN J. FRISBIE

APPROVAL OF CITY ENGINEER

I, THE UNDERSIGNED CITY ENGINEER IN AND FOR THE CITY OF EAGLE, ADA COUNTY, IDAHO, HEREBY APPROVE THIS PLAT OF "COAST TO COAST SUBDIVISION".

CITY ENGINEER ~ EAGLE, IDAHO

APPROVAL OF CITY COUNCIL

I, THE UNDERSIGNED CITY CLERK IN AND FOR THE CITY OF EAGLE, ADA COUNTY, IDAHO, HEREBY CERTIFY THAT AT A REGULAR MEETING OF THE CITY COUNCIL HELD ON THE 16th DAY OF May, 2006, THIS PLAT OF "COAST TO COAST SUBDIVISION" WAS DULY ACCEPTED AND APPROVED.

DATE 7-7-06

Sharon K Bergmann
CITY CLERK EAGLE, IDAHO

CITY OF EAGLE SEAL STATE OF IDAHO

HEALTH CERTIFICATE

SANITARY RESTRICTIONS AS REQUIRED BY IDAHO CODE, TITLE 50, CHAPTER 13 HAVE BEEN SATISFIED ACCORDING TO THE LETTER TO BE READ ON FILE WITH THE COUNTY RECORDER OR HIS AGENT LISTING THE CONDITIONS OF APPROVAL. SANITARY RESTRICTIONS MAY BE REIMPOSED, IN ACCORDANCE WITH SECTION 50-1326, IDAHO CODE, BY THE ISSUANCE OF A CERTIFICATE OF DISAPPROVAL.

HEALTH OFFICER — DATE 3/23/06

CENTRAL DISTRICT HEALTH DEPARTMENT ADA COUNTY

ADA COUNTY HIGHWAY DISTRICT COMMISSIONERS ACCEPTANCE

THE FOREGOING PLAT WAS ACCEPTED AND APPROVED BY THE BOARD OF ADA COUNTY HIGHWAY DISTRICT COMMISSIONERS ON THE 8th DAY OF MARCH, 2006.

ADA COUNTY HIGHWAY DISTRICT

ADA COUNTY HIGHWAY DISTRICT SEAL

CERTIFICATE OF COUNTY TREASURER

I, THE UNDERSIGNED, COUNTY TREASURER IN AND FOR THE COUNTY OF ADA, STATE OF IDAHO, PER THE REQUIREMENTS OF I.C. 50-1308, DO HEREBY CERTIFY THAT ANY AND ALL CURRENT AND/OR DELINQUENT COUNTY PROPERTY TAXES FOR THE PROPERTY INCLUDED IN THIS SUBDIVISION HAVE BEEN PAID IN FULL. THIS CERTIFICATION IS VALID FOR THE NEXT THIRTY (30) DAYS ONLY.

DATE 10-5-06

Lynda Fischer by
COUNTY TREASURER Barbara Moulton, Deputy

ADA COUNTY TREASURER

CERTIFICATE OF COUNTY RECORDER

STATE OF IDAHO
COUNTY OF ADA } S.S.

I HEREBY CERTIFY THAT THIS INSTRUMENT WAS FILED FOR RECORD AT THE REQUEST OF COAST 2 COAST L.L.C., AT 12 MINUTES PAST 11 O'CLOCK A .M. ON THIS 6th DAY OF OCT, 2006, AND WAS DULY RECORDED IN BOOK 96 OF PLATS AT PAGES 11955 THROUGH 11963.

INSTRUMENT NUMBER 106159427

DEPUTY — EX OFFICIO RECORDER

Fee $46.00

TOOTHMAN-ORTON ENGINEERING COMPANY
9777 CHINDEN BOULEVARD
BOISE, IDAHO 83714
(208) 323-2288

SHEET 9 OF 9

H:\03020\ACADDWG\SURVEY\FINAL PLAT\03020-PLAT-SHT-8-9.dwg